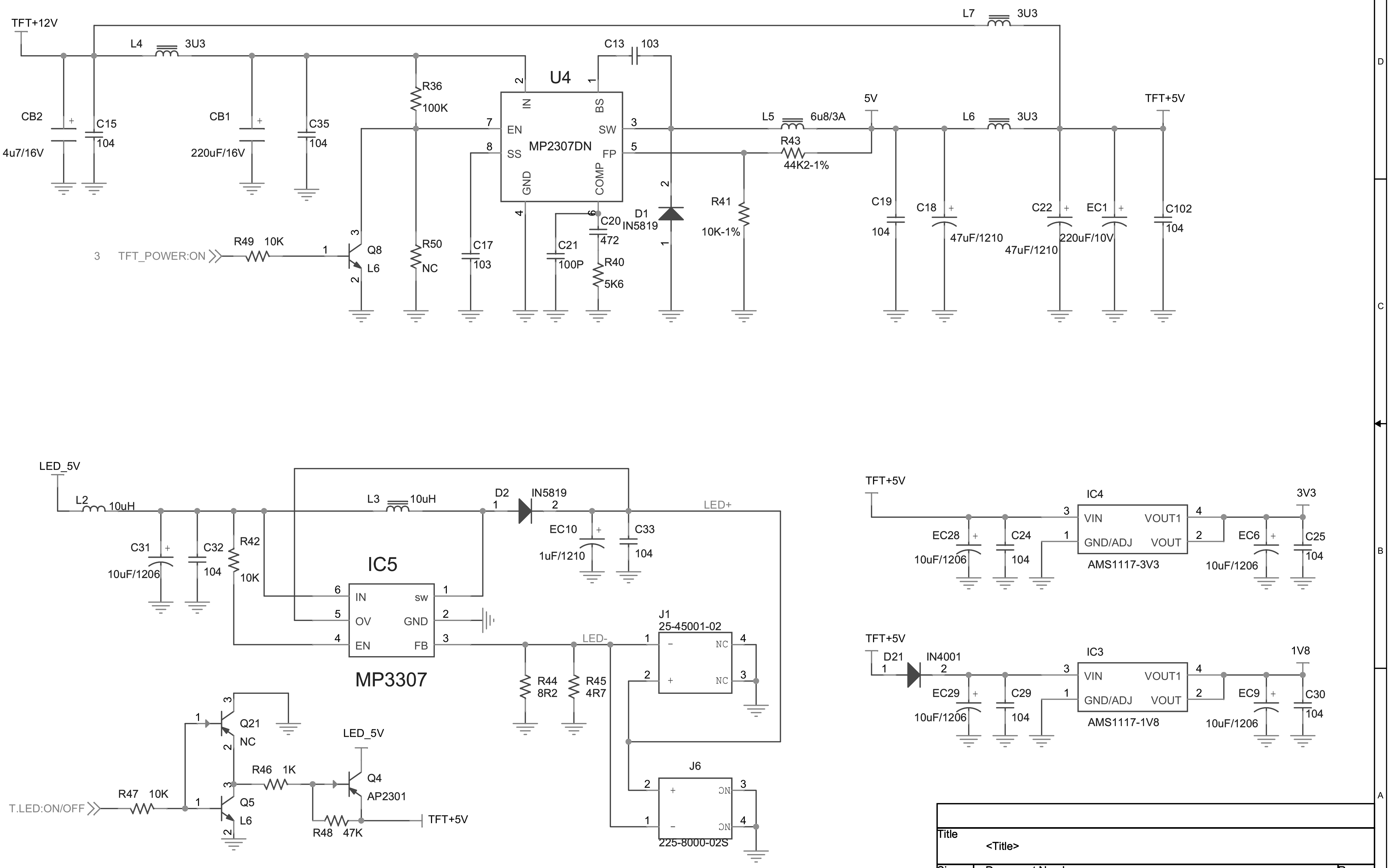

Title	<Title>	
Size A4	Document Number <Power>	Rev <4>
Date: Wednesday, July 04, 2012	Sheet 5 of 10	

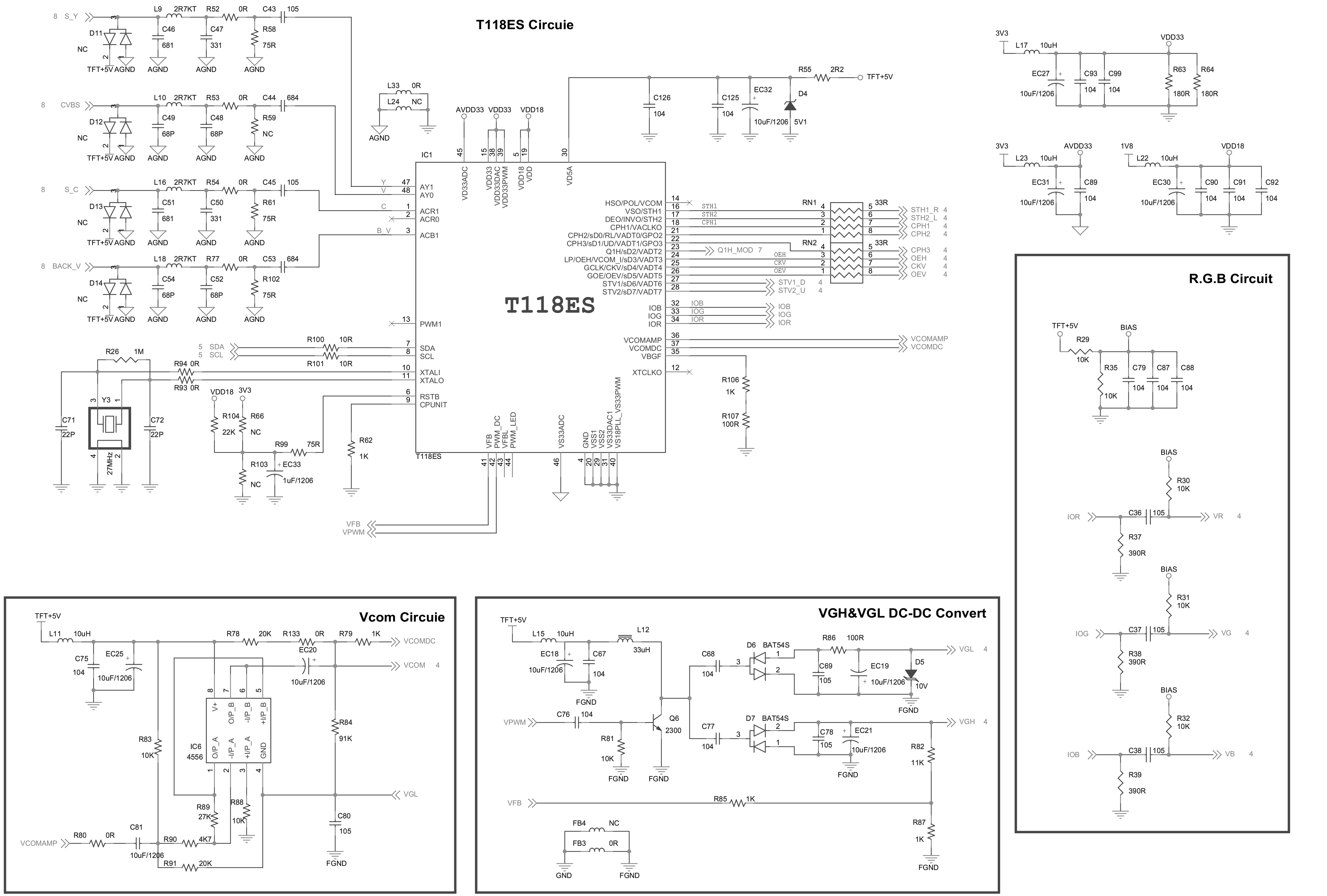
T118ES Circuie
T118ES
R.G.B Circuit
Vcom Circuie
VGH&VGL DC-DC Convert

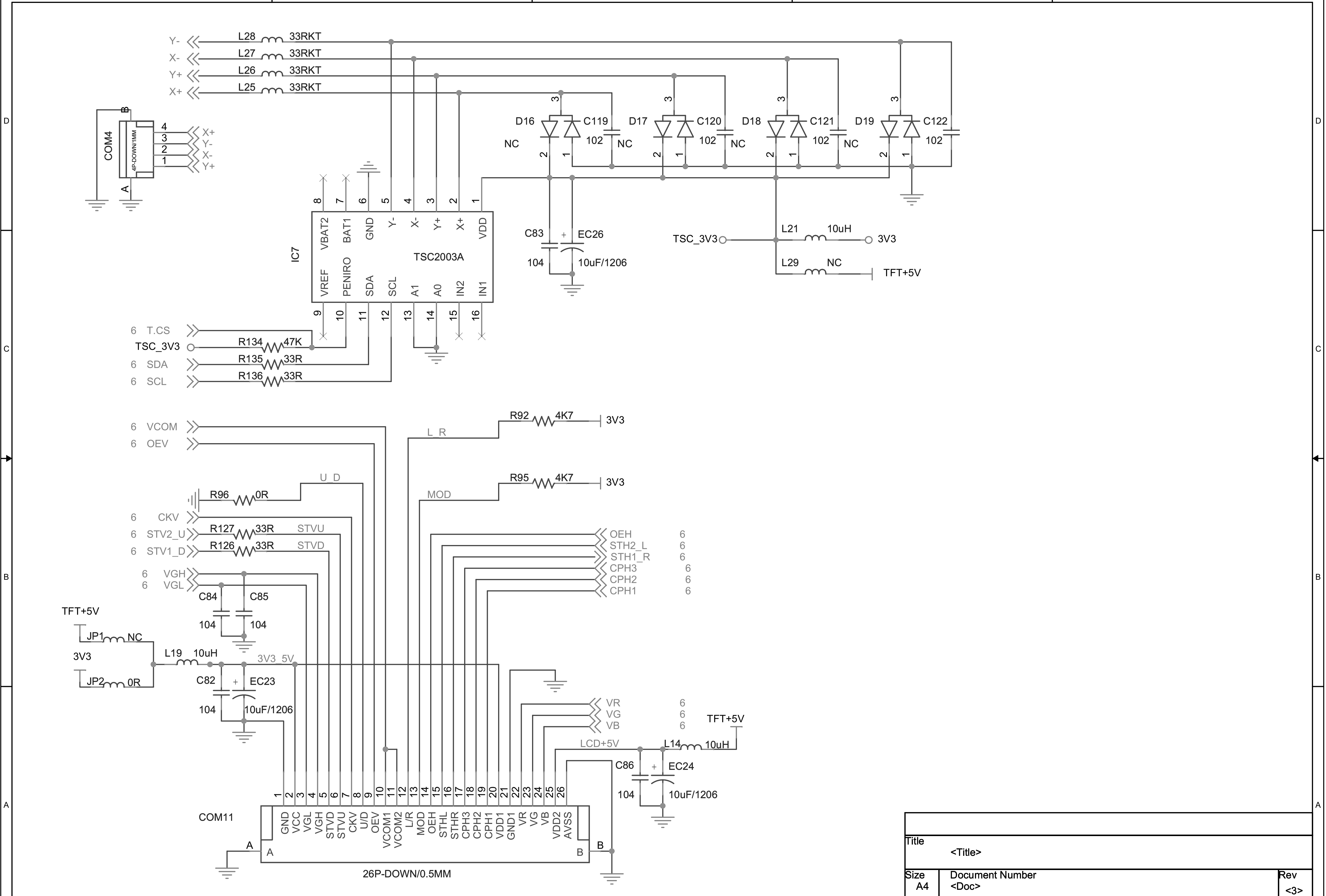

Title	<Title>		
Size A4	Document Number <Doc>		Rev <3>
Date:	Wednesday, July 04, 2012	Sheet 7 of 10	

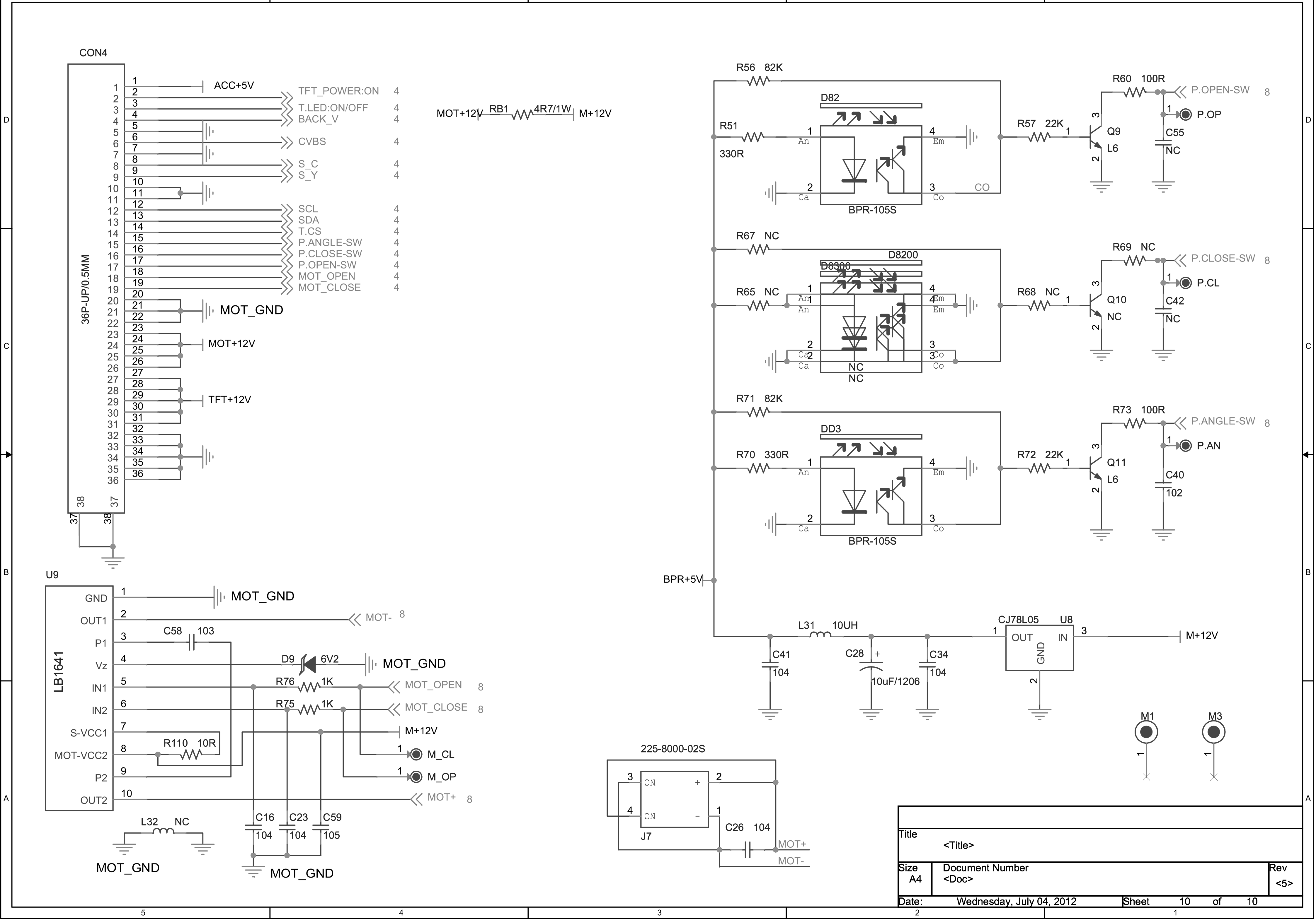

CON4
36P-UP/0.5MM
ACC+5V
TFT_POWER:ON
T.LED:ON/OFF
BACK_V
CVBS
S_C
S_Y
SCL
SDA
T.CS
P.ANGLE-SW
P.CLOSE-SW
P.OPEN-SW
MOT_OPEN
MOT_CLOSE
MOT_GND
MOT+12V
TFT+12V
MOT+12V RB1 4R7/1W M+12V
U9
LB1641
GND
OUT1
P1
Vz
IN1
IN2
S-VCC1
MOT-VCC2
P2
OUT2
MOT-
C58 103
D9 6V2
R76 1K
R75 1K
MOT_OPEN
MOT_CLOSE
M+12V
R110 10R
M_CL
M_OP
MOT+
L32 NC
C16 104
C23 104
C59 105
R56 82K
D82
R51 330R
An
Ca
Em
Co
CO
BPR-105S
R57 22K
Q9 L6
R60 100R
P.OPEN-SW
P.OP
C55 NC
R67 NC
D8200
D8300
R65 NC
R68 NC
Q10 NC
R69 NC
P.CLOSE-SW
P.CL
C42 NC
R71 82K
DD3
R70 330R
R72 22K
Q11 L6
R73 100R
P.ANGLE-SW
P.AN
C40 102
BPR+5V
L31 10UH
C41 104
C28 10uF/1206
C34 104
CJ78L05 U8
OUT
IN
GND
M+12V
M1
M3
225-8000-02S
J7
NC
C26 104
MOT+
MOT-
Title
<Title>
Size
A4
Document Number
<Doc>
Rev
<5>
Date: Wednesday, July 04, 2012
Sheet 10 of 10